ITEM No.	INDEX / Qty.	DRAWING No. / WORKPIECE NAME	TYPE / DIMENSIONS	SUPPLIER / STANDARD	Mat. STANDARD / MATERIAL
4					
	1	TERMINAL BLOCK(Earth)			RAAD:RPIT 2.5
3					
	12	TERMINAL BLOCK			RAAD:RPIT 2.5
2					
	2	Gland	PG16		Polyamide UL94V0
1					
	1	Terminal Box	157x117x75	IP 55	Polyamide UL94V0

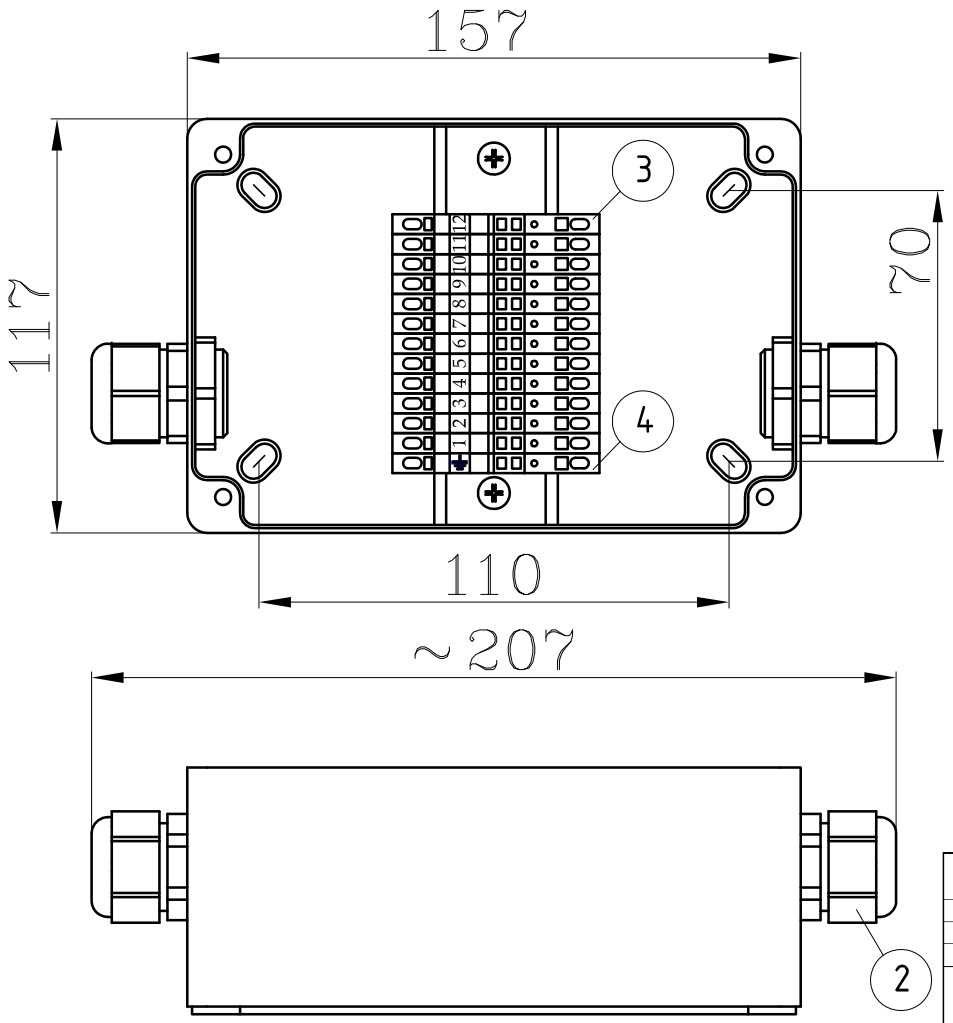

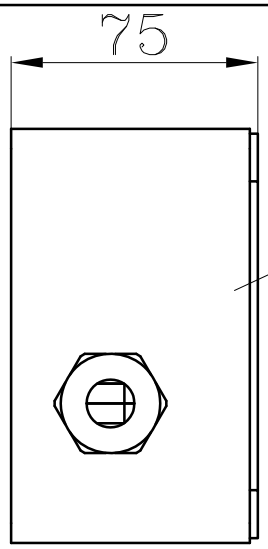

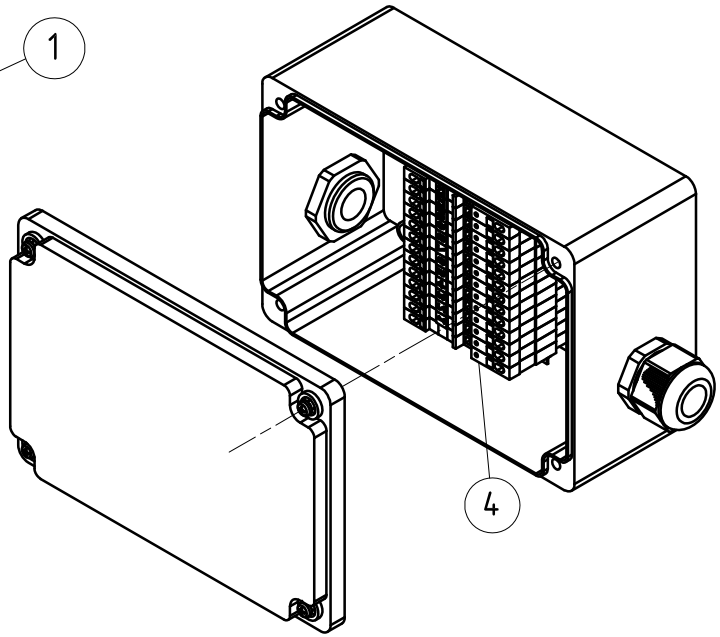

Remarks	Date	Rev.	Revision No.

شرکت ترانسفورماتور توزیع زنگان
ZANGAN DISTRIBUTION TRANSFORMER CO.

Tolerance: -
Scale: -

Subject: Terminal Box(IP55)

Date:
Sheet:
Comp.by: A.Shokroghli
Checked & Approved by: Paknia
Drawing No.: